Local Authority stamp

BLOCK D

SITE LOCATION

CLOUDED INDICATES EXISTING EQUIPMENT

FIRE SIGNS & EQUIPMENT COUNT

SYMBOL																		
REFERENCE	E1	E2	E3	E6	E6	E7	F4	F5	F6	F13	F16	F19	F45	F31	FHR	EXT	HYD	BGU
QUANTITY	7	6	5	1	1	1	2	4	3	3	-	1	1	2	2	7	1	2

FIRE DOOR SCHEDULE

DOOR TAG	SWING	FIRE RATING	DOOR SIZE WIDTH (mm)	DOOR SIZE HEIGHT (mm)	NORMAL DOOR OPEN	NORMAL DOOR CLOSED	PANIC BAR	DOOR CLOSER	HOLD OPEN
FD_1	ONE WAY	60 minute	815	2100	N/A	YES	NO	YES	NO

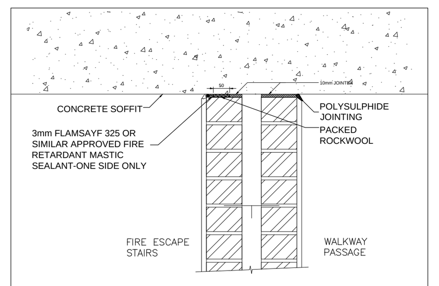

TYPICAL FIRE SEALING DETAIL
1 HOUR FIRE RATED WALLS (scale 1:20)

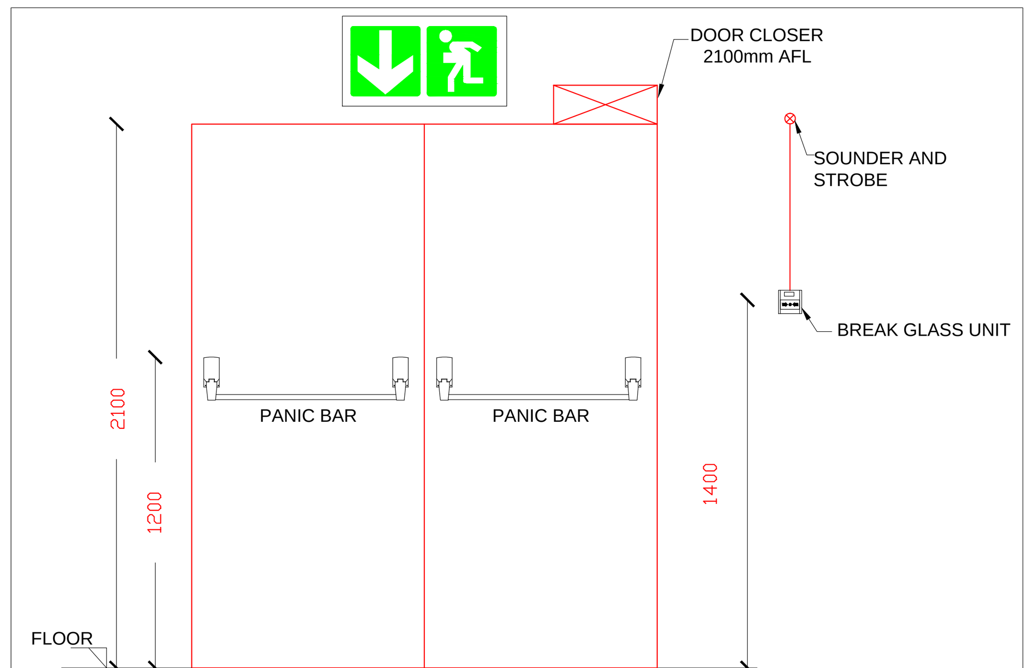

PANIC BAR DETAIL (scale 1:25)

FIRE SERVICES DESIGN SUMMARY SCHEDULE

1	OCCUPANCY INFORMATION			
1.1	FLOOR AREA:	1125	m²	OCCUPIED
1.2	OCCUPANCY CLASS:	G1		OFFICE
1.3	POPULATION:	1/	SEAT = 108	NUMBER OF PEOPLE
1.4	ROUTES OF ESCAPE required:			1-off 789mm & 1-off 1060mm wide
2	FIRE PROTECTION EQUIPMENT			
2.1	FIRE HYDRANT:	1/	1000 m² = 1	REQUIRED, 90 METERS APART
2.2	FIRE HOSE REEL:	1/	500 m² = 2	REQUIRED, WITH 30 METER LONG HOSES
2.3	EXTINGUISHERS:	1/	200 m² = 6	REQUIRED, 4.5 kG DCP TYPE
2.4	SPRINKLER PROTECTIONS:	NO	NOT REQUIRED	
3	RELATED SERVICES			
3.1	FIRE DETECTION:	YES	THROUGHOUT THE BUILDING IN ACCORDANCE WITH SANS 10139:2012 (Category L1)	
3.2	SMOKE VENTILATION:	NO	COMPARTMENTALISED	

SCOPE OF WORKS CLARIFICATION

A. FIRE CONTRACTOR
1. SERVICE AND RE-USE EXISTING FIRE EXTINGUISHERS AND 2-OFF FIRE HOSE REELS.
2. SUPPLY & INSTALL NEW FIRE FIGHTING EQUIPMENT AS INDICATED ON PLAN.
3. SUPPLY & INSTALL NEW FIRE SIGNAGE AS INDICATED ON PLAN.
4. NEW EVACUATION PLANS & PROCEDURES.

B. ELECTRICAL CONTRACTOR
1. SUPPLY AND INSTALL EMERGENCY LIGHTING THROUGHOUT THE SPACE AS SHOWN ON PLAN, c/w BATTERY BACKUP.

C. BUILDER.
1. SUPPLY AND INSTALL PANIC BARS c/w WHITE ON GREEN "PUSH BAR TO OPEN" SIGN
2. PROVIDING PENETRATIONS THROUGH CEILINGS AND WALLS AND MAKING GOOD THEREOF.
3. FIXING OF EXTINGUISHER BACKING BOARDS TO WALLS SUPPLIED BY FIRE CONTRACTOR.
4. SUPPLY & INSTALL NEW FIRE DOORS C/W 25mm STEEL FRAME AND DOOR CLOSER.
5. FIRE SEALING OF PENETRATIONS THROUGH FIRE WALLS.

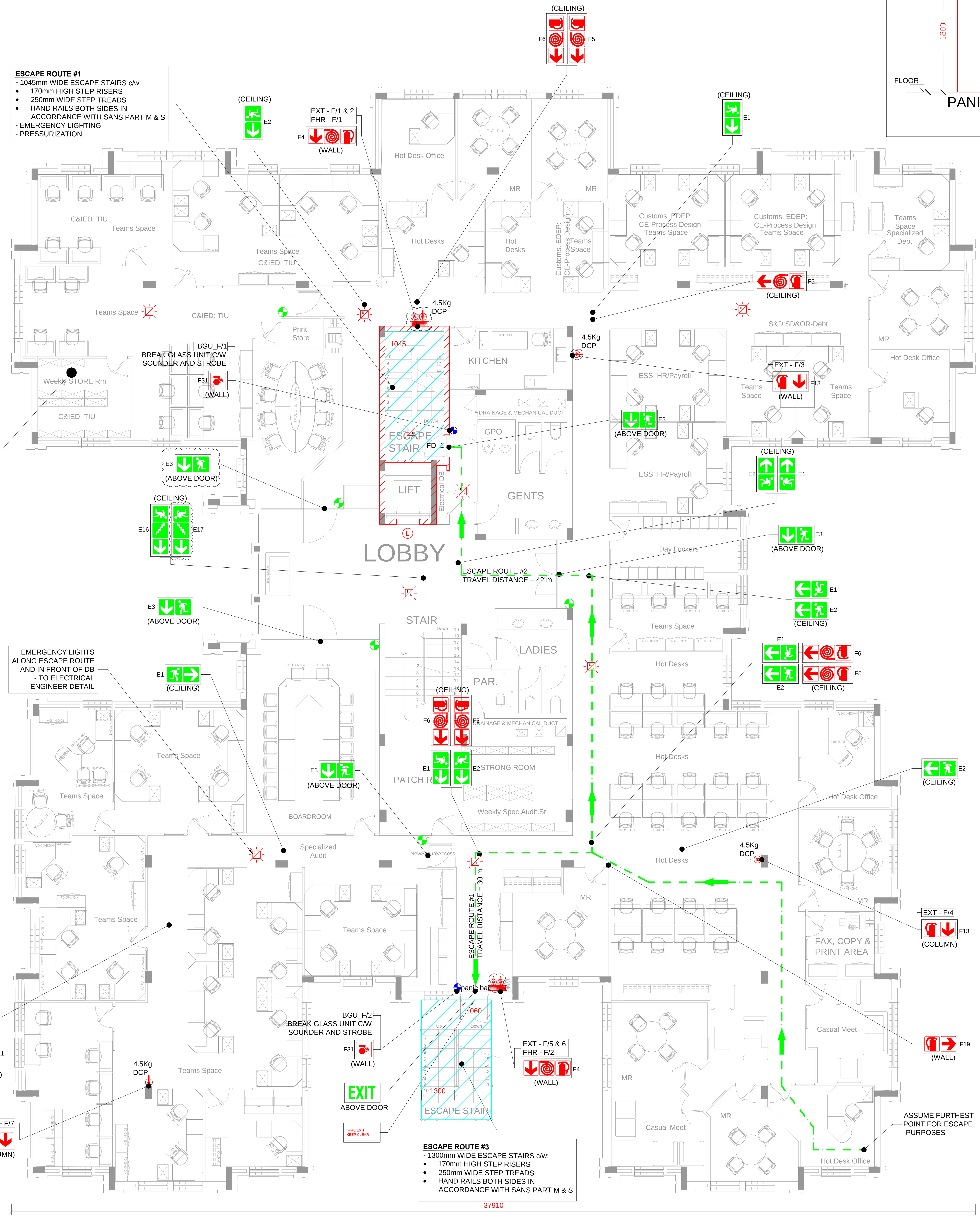

FIRST STOREY - PROPOSED FIRE SERVICES LAYOUT (Scale 1:100)

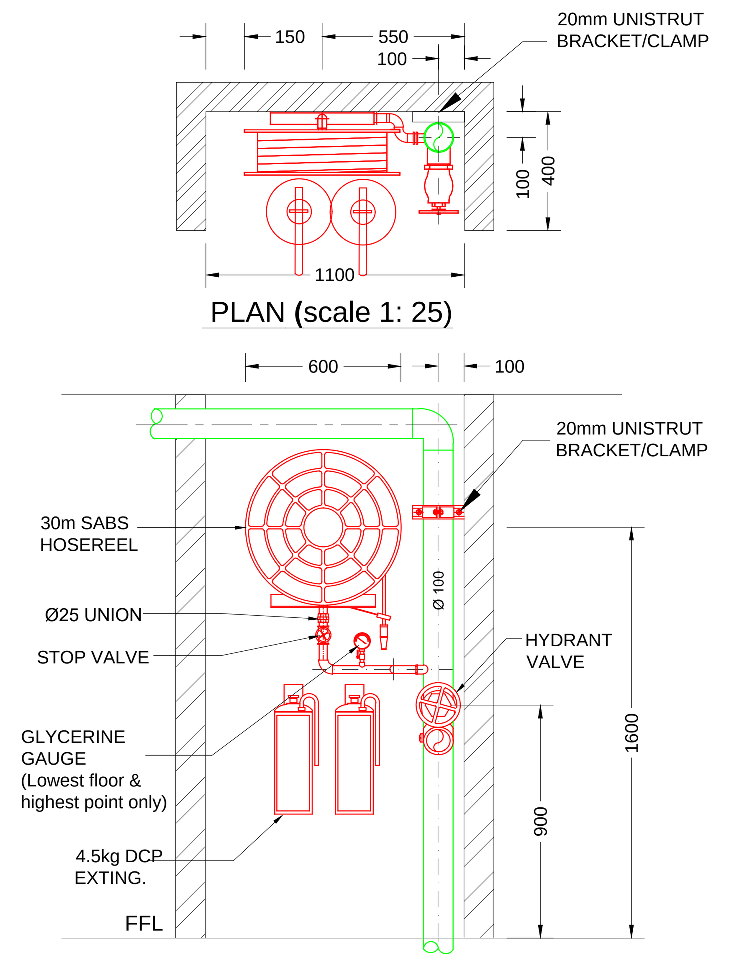

HYDRANT, FIRE HOSE & EXTINGUISHER ELEVATION (scale 1: 25)

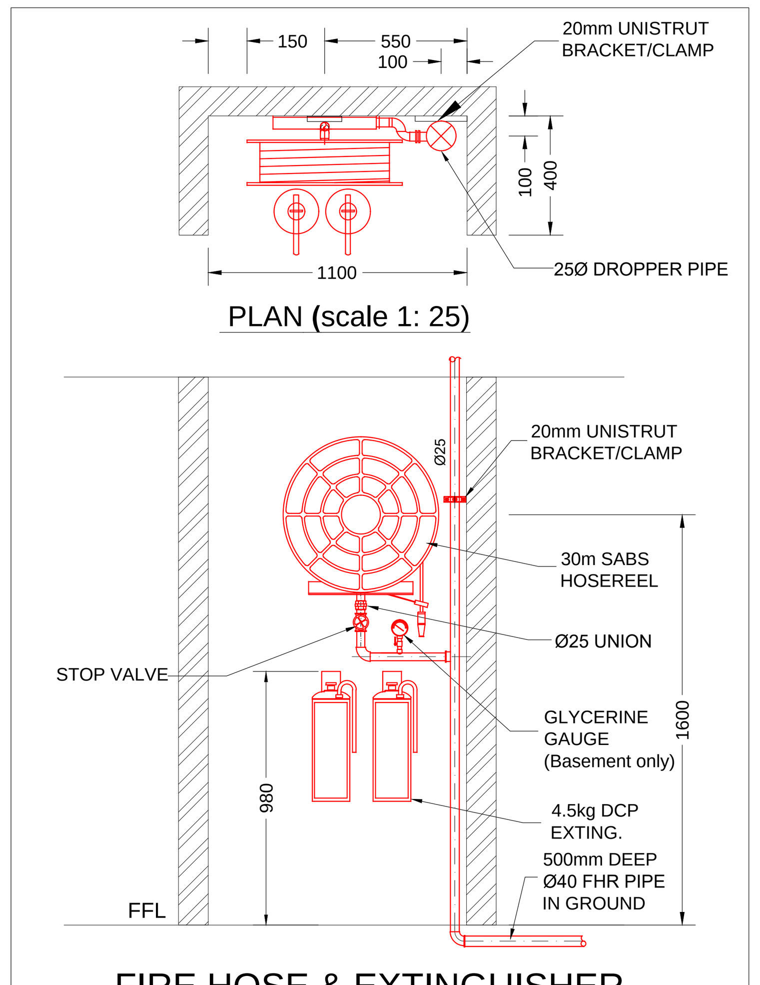

FIRE HOSE & EXTINGUISHER ELEVATION (scale 1: 25)

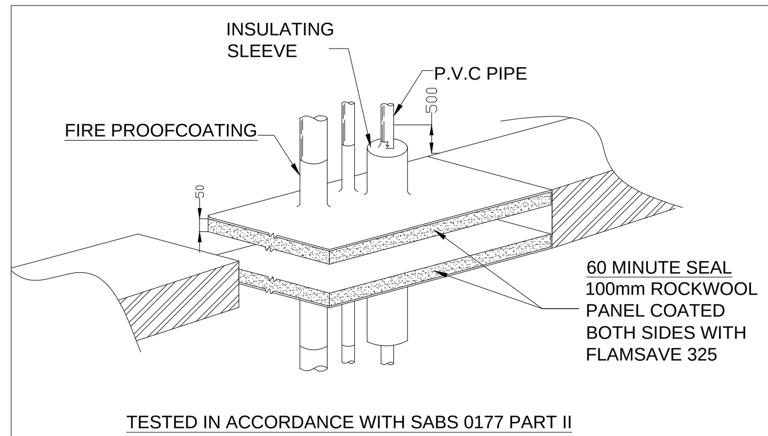

TESTED IN ACCORDANCE WITH SABS 0177 PART II

TYPICAL CABLE FIRE PROOFING DETAIL (scale 1:25)

FIRE INSTALLATION NOTES

PORTABLE FIRE EXTINGUISHERS
FIRE EXTINGUISHERS SHALL BE 4.5kg AND 9kg DRY CHEMICAL POWDER TYPE AND SHALL COMPLY WITH SABS 810.
ALL FIRE EXTINGUISHERS SHALL BE MOUNTED ON WOODEN BACKING BOARDS.

FIRE HOSE REELS
FIRE HOSE REELS SHALL CONFORM TO SABS 543.
ALL FIRE HOSE REELS SHALL BE COMPLETE WITH 30 METERS OF HOSE AND SHALL HAVE A MINIMUM FLOW RATE OF 0,5 l/s AT 300 kPa.

FIRE HYDRANTS
FIRE HYDRANTS SHALL COMPLY WITH SABS 543 AND HAVE A MINIMUM FLOW RATE OF 20 l/s AT 300 kPa.

PIPING
NO PIPEWORK TO BE EMBEDDED IN SCREED OR CONCRETE FLOORS.
ALL PIPEWORK SHALL CONFORM TO SABS 62 (STEEL, MEDIUM).

THE DISTANCE BETWEEN PIPE SUPPORT BRACKETS FOR THE HORIZONTAL & VERTICAL PIPEWORK, SHALL NOT EXCEED THE FOLLOWING:

NOMINAL DIAMETER	MAXIMUM SPACING
< 65 MM	4M
> 65MM <100MM	6.1M

PIPING SHALL BE PROPERLY CLEANED OFF SITE, FROM RUST & LOOSE MILL SCALE WITH A HARD WIRE, & DECREASED PRIOR TO APPLICATION OF A RED OXIDE PRIMER.FINAL COATS OF PAINT TO BE 2 OFF SIGNAL RED, HIGH GLOSS ENAMEL TO SABS 630.
ALL BRACKETS, SUPPORTS & FITTINGS TO BE GALVANIZED.
ALL SCREWED JOINTS TO COMPLY WITH BS 21 OR SIMILAR.
SEALING OF JOINTS WILL BE WITH HEMP, STOGG OR PTFE TAPE, HYDRAULIC PRESSURE TESTING SHALL BE DONE TO 15 BAR FOR A PERIOD OF 24 HOURS.

SYMBOLIC SAFETY SIGNAGE
SYMBOLIC SAFETY SIGNAGE SHALL COMPLY WITH SABS 1186 PART V AND SHALL BE OF THE PHOTOLUMINESCENT TYPE.
SIGNAGE SHALL BE INSTALLED SUCH AS TO CLEARLY INDICATE THE POSITIONS OF ALL FIRE EQUIPMENT AND ESCAPE ROUTES.
EACH FLOOR LEVEL SHALL BE NUMBERED IN THE ESCAPE STAIRS.
SIGNAGE ON DRAWING IS AN INDICATION OF SIGNAGE REQUIRED.
FINAL SIGNAGE TO BE DETERMINED ON SITE.
ADDITIONAL SIGNAGE TO BE ADDED SHOULD IT BE REQUESTED BY THE LOCAL AUTHORITIES.
FINAL FIRE SIGNAGE IS TO BE DETERMINED ON SITE WITH THE COUNCIL'S FIRE OFFICER.

FIRE DOORS
FIRE DOORS OF THE RATING AND WIDTH AS INDICATED ON THE DRAWINGS, SHALL BE INSTALLED AND SHALL COMPLY WITH SANS 1253.
ALL FIRE DOORS TO BE FITTED WITH SELF CLOSING MECHANISMS

FIRE ALARM / DETECTION
FIRE DETECTION AND ALARM SYSTEM SHALL BE INSTALLED AS INDICATED ON THE DRAWINGS AND IN ACCORDANCE WITH SANS 10139.

ESCAPE DOORS
ALL ESCAPE DOORS SHALL BE COMPLETE WITH FIRE ESCAPE IRONMONGERY.

FIRE ESCAPE ROUTES
FIRE ESCAPE ROUTES, INCLUDING CORRIDORS AND STAIRWAYS SHALL HAVE MINIMUM WIDTH OF 1500mm UNLESS SHOWN OTHERWISE .
ALL ESCAPE ROUTES SHALL HAVE A FIRE RESISTANCE AS INDICATED.
ALL EMERGENCY ROUTES SHALL HAVE A FIRE RESISTANCE AS INDICATED ON THE DRAWINGS.

FIRE SERVICES LEGEND

- BREAK GLASS UNIT
- HOSE REEL
- FIRE HYDRANT
- 4,5kg DCP FIRE EXTINGUISHER
- DIRECTIONAL ARROW
- FIRE ESCAPE
- 60MIN FIRE RATED LIFT LANDING DOOR
- 60 MINUTE FIRE RATED WALL

FIRE DESIGN CONFIRMATION

DEEMED TO SATISFY WITH SANS 10400	N/A
RATIONAL ASSESSMENT	YES
RATIONAL DESIGN EQUIVALENT OR SUPERIOR TO SANS 10400	N/A

ISSUE DATE: 2023-08-24 REVISION: A

X	FOR INFORMATION
	FOR APPROVAL
	FOR TENDER
	FOR CONSTRUCTION
	AS-BUILT

REVISIONS

No	Date	Description	Rev By	Ckd By
A	24/08/2023	ISSUED FOR INFORMATION	S.M	H.R

CONSULTMECH
Mechanical Engineers
09 Plantanus Street
Kuilsriver
7580
Cell.: (072) 948 4470
Tel.: (021) 903 1407
Email: info@consultmech.co.za

PROJECT	LAHAE LA SARS - BLOCK D		
	BROOKLYN		
DWG TITLE	FIRST STOREY - PROPOSED		
	FIRE SERVICES LAYOUT		
DWG NUMBER	21B09-F-504-05	REV.	A
DESIGNED BY	S. MAFUYA	SCALE	1:100 @ A1
CHECKED BY	H.D ROUX	ECSA NUMBER	201070151
APPROVED BY	H.D ROUX	ECSA NUMBER	201070151

COPYRIGHT AND RIGHT OF REPRODUCTION OF THIS DRAWING OR ANY PORTION THEREOF IS RESERVED BY THE ENGINEERS

W:\companyshare\SERVER\01 Projects\2021\21809 - RFX 6000014614 SARS TENDER\8. DRAWINGS\MECH\FIRE\SIGNAGE\21B09-F-504 - BLOCK D\PROPOSED\INFORMATION\REV_A\21B09-F-504-05-BLOCK D_2023-08-24.dwg, 2023/08/25 09:07:46 AM, K.K